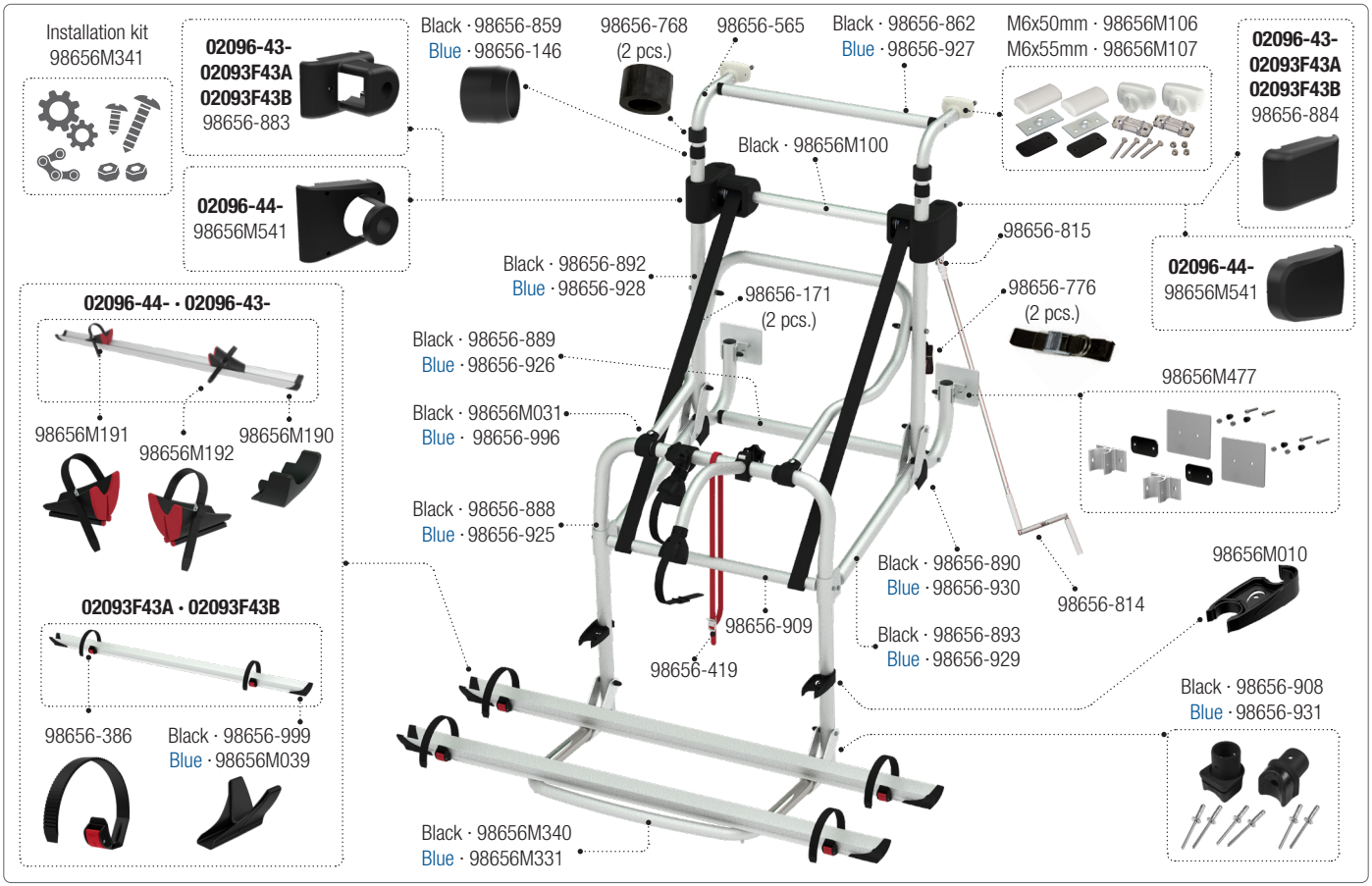

Copyright © Fiamma SpA, Italy · 10/2023