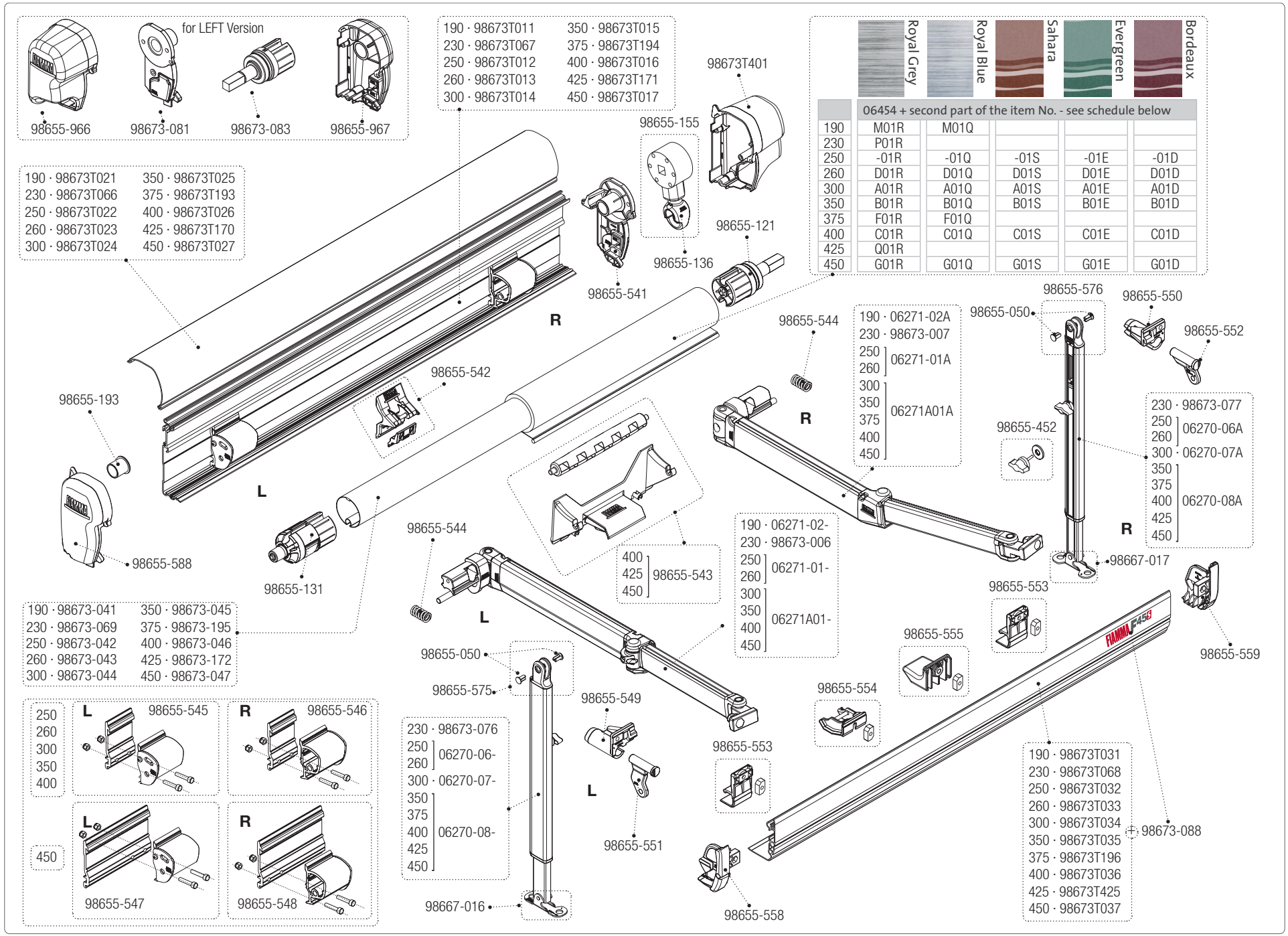

Copyright © Fiamma SpA, Italy · 12/2022